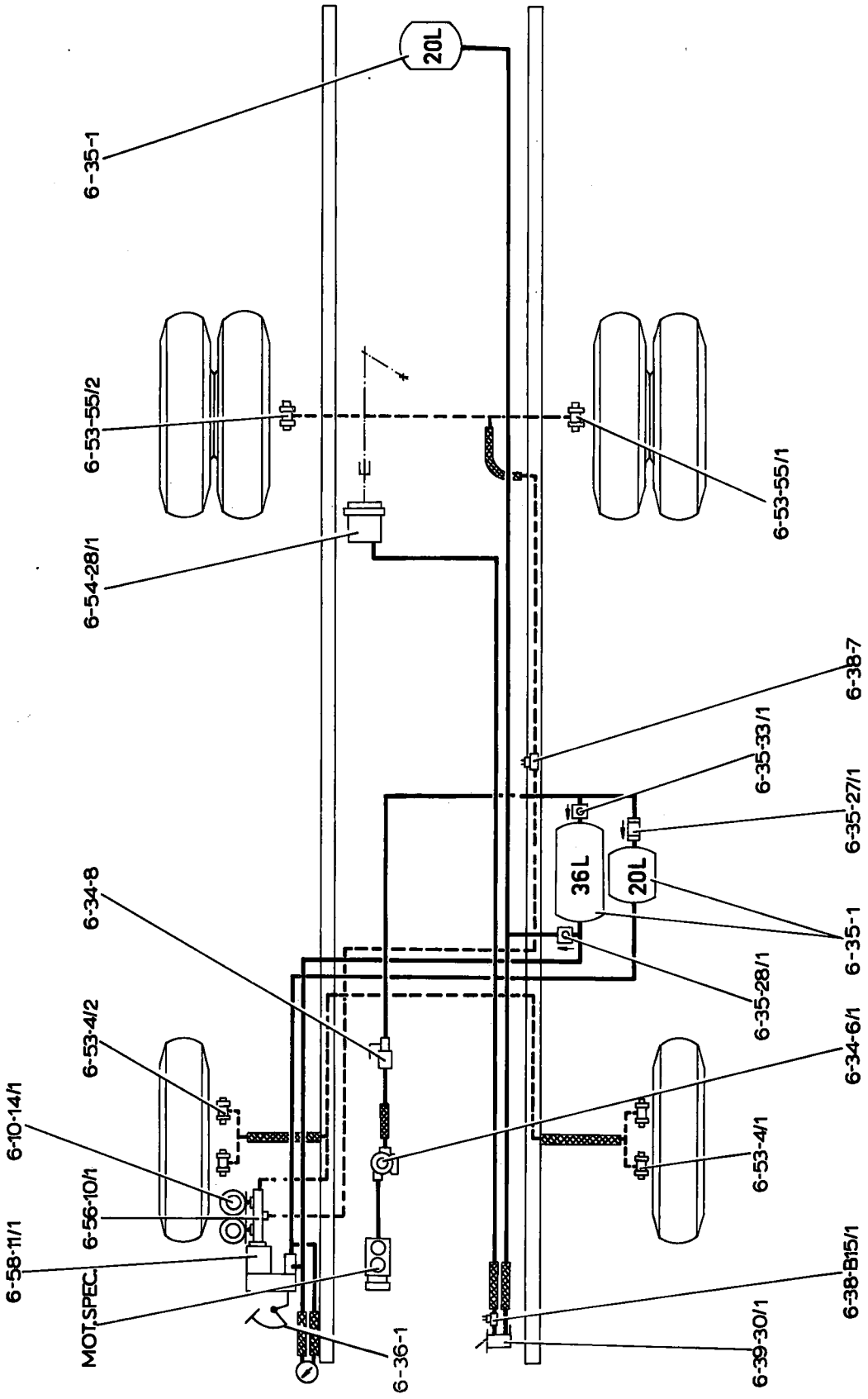
6-35-1
20L
6-53-55/2
6-53-55/1
6-54-28/1
6-38-7
6-35-33/1
6-35-27/1
36L
20L
6-35-1
6-35-28/1
6-34-8
6-53-4/2
6-34-6/1
6-10-14/1
6-53-4/1
6-56-10/1
6-58-11/1
6-38-B15/1
MOT.SPEC
6-36-1
6-39-30/1

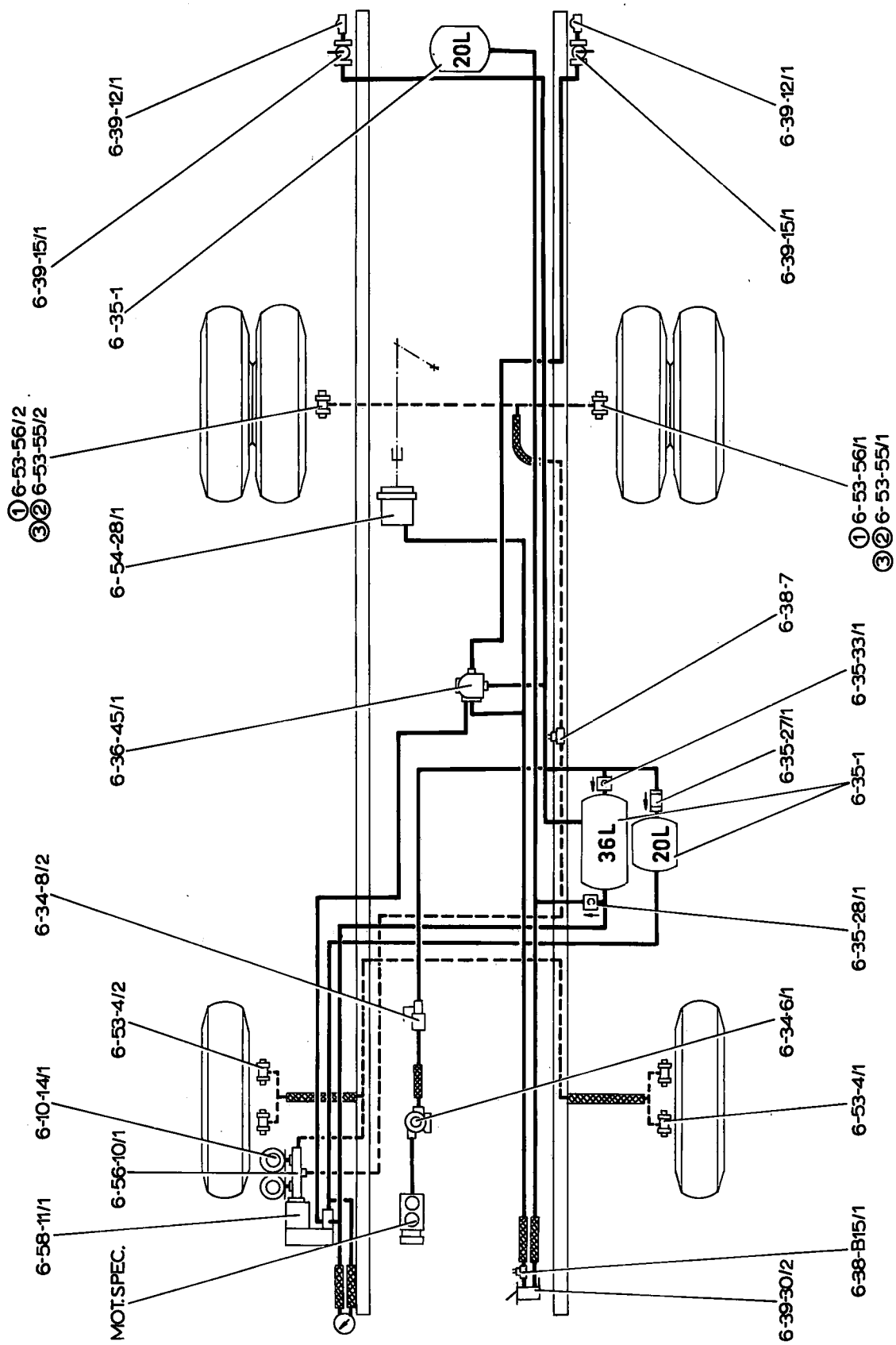
6-39-12/1
6-39-15/1
6-35-1
20L
6-39-12/1
6-39-15/1
①6-53-56/2
③②6-53-55/2
6-54-28/1
①6-53-56/1
③②6-53-55/1
6-38-7
6-36-45/1
6-35-33/1
6-35-27/1
6-35-1
36L
20L
6-34-8/2
6-35-28/1
6-53-4/2
6-34-6/1
6-10-14/1
6-53-4/1
6-56-10/1
6-58-11/1
6-38-B15/1
MOT.SPEC.
6-39-30/2

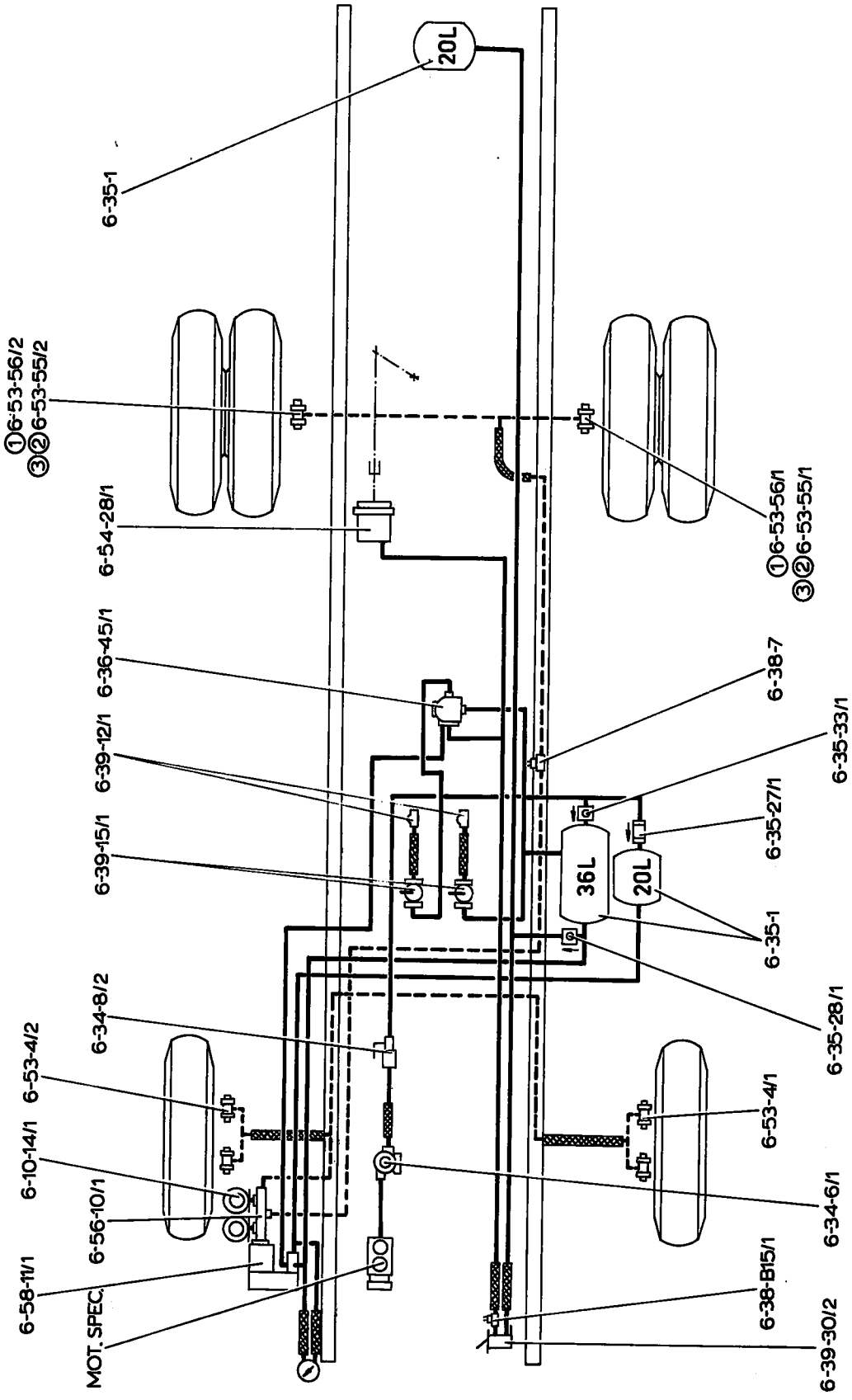
6-35-1
20L
①6-53-56/2
③②6-53-55/2
6-54-28/1
6-36-45/1
6-39-12/1
6-39-15/1
6-34-8/2
6-53-4/2
6-10-14/1
6-56-10/1
6-58-11/1
MOT. SPEC.
①6-53-56/1
③②6-53-55/1
6-38-7
6-35-33/1
6-35-27/1
36L
20L
6-35-1
6-35-28/1
6-53-4/1
6-34-6/1
6-38-B15/1
6-39-30/2

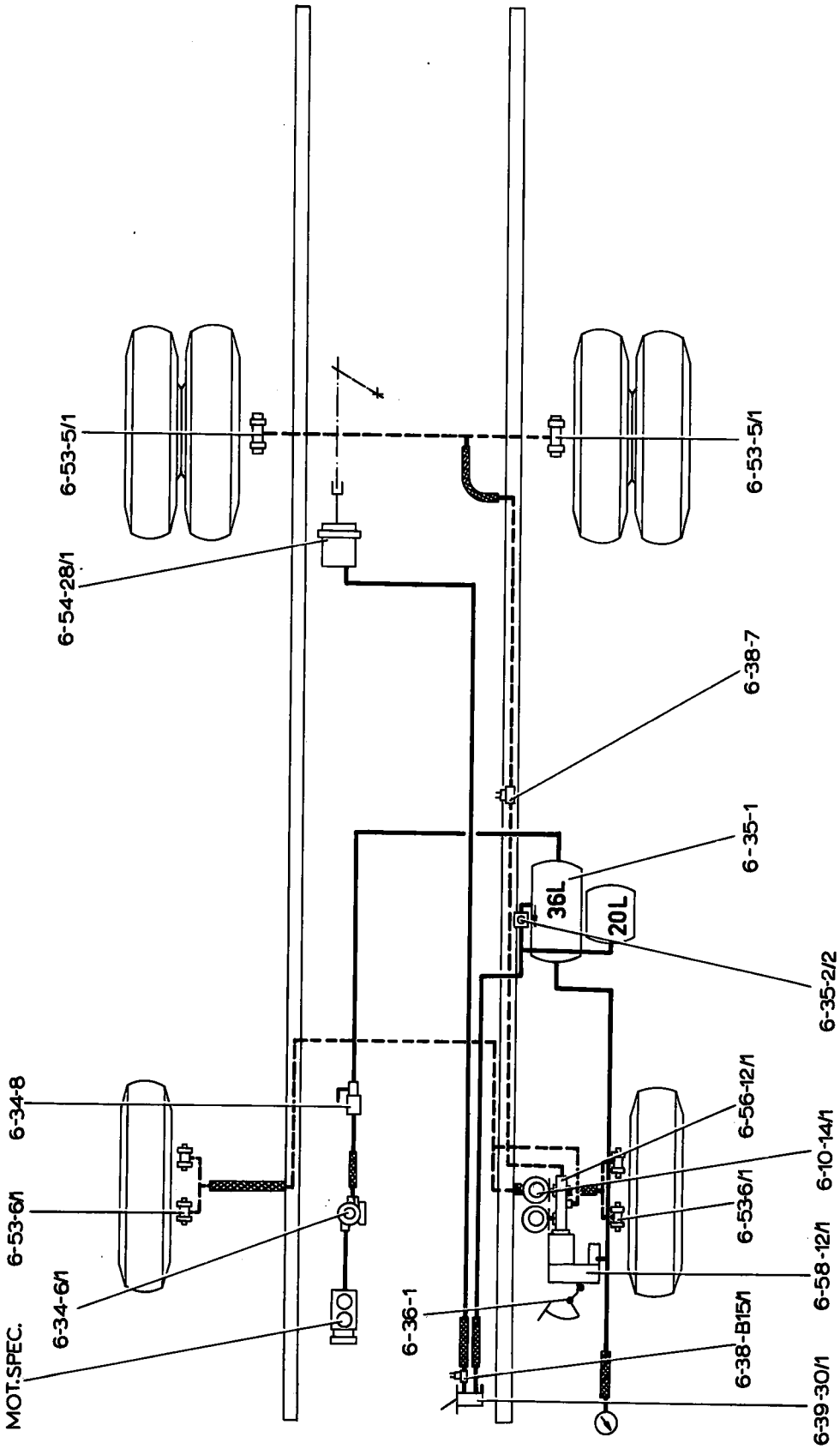
6-53-5/1
6-54-28/1
6-34-8
6-53-6/1
6-34-6/1
MOT.SPEC.
6-36-1
6-38-7
6-35-1
36L
20L
6-35-2/2
6-56-12/1
6-10-14/1
6-53-6/1
6-58-12/1
6-38-B15/1
6-39-30/1
6-53-5/1

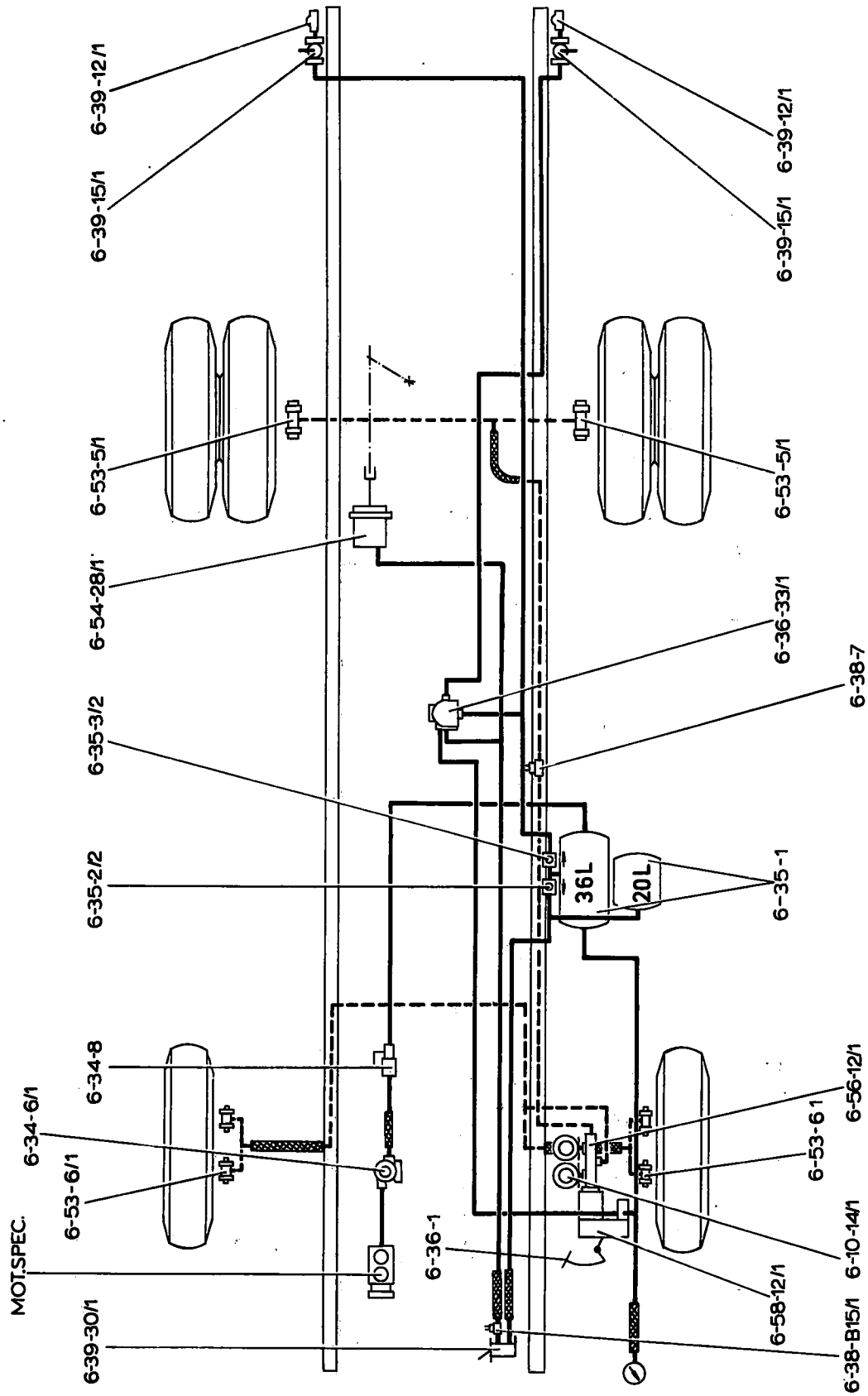
6-39-12/1
6-39-15/1
6-53-5/1
6-54-28/1
6-35-3/2
6-35-2/2
6-34-8
6-34-6/1
6-53-6/1
MOT.SPEC.
6-39-30/1
6-36-1
6-39-12/1
6-39-15/1
6-53-5/1
6-36-33/1
6-38-7
36L
20L
6-35-1
6-56-12/1
6-53-6 1
6-10-14/1
6-58-12/1
6-38-B15/1

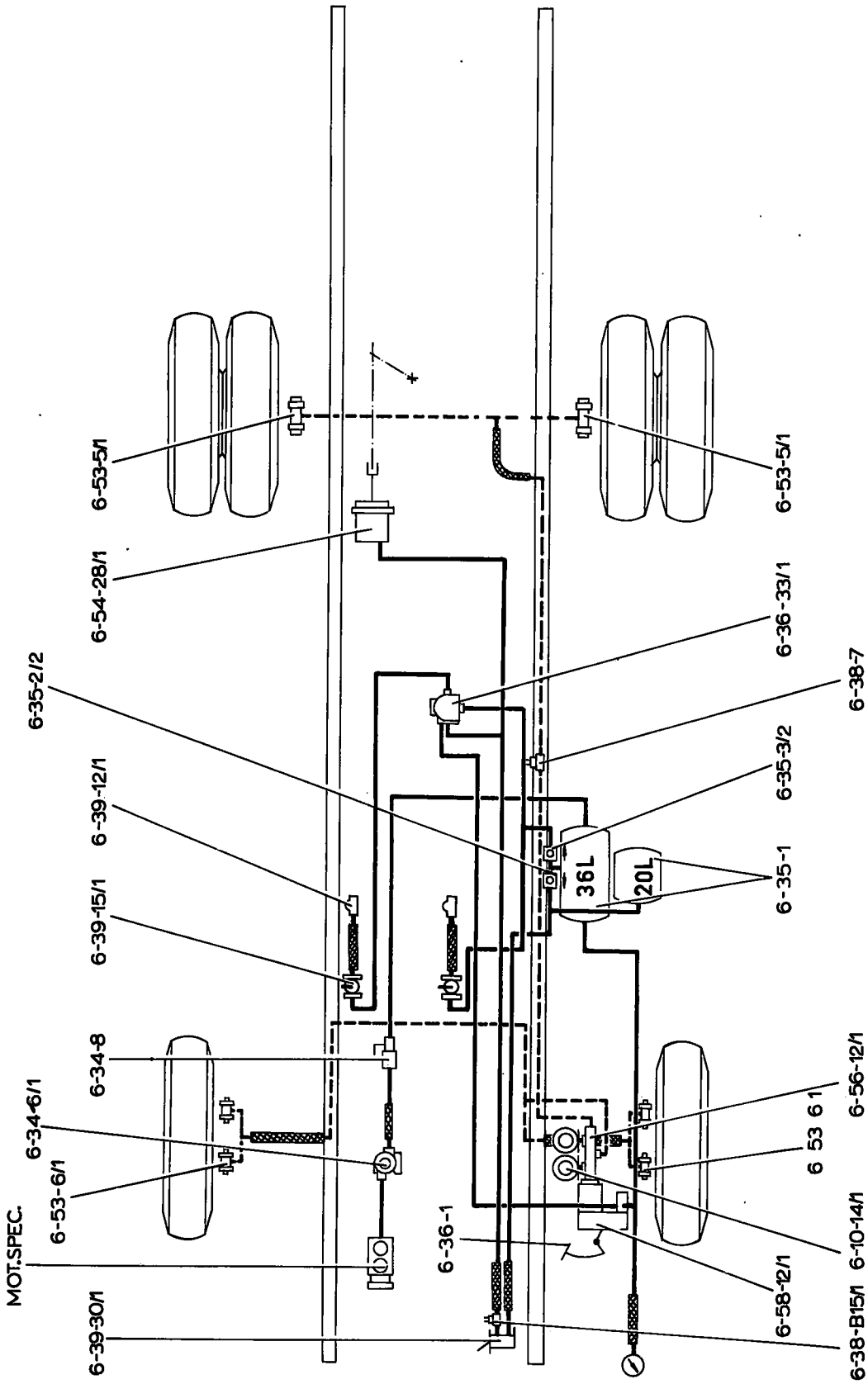
6-53-5/1
6-54-28/1
6-35-2/2
6-39-12/1
6-39-15/1
6-34-8
6-34-6/1
6-53-6/1
MOT.SPEC.
6-39-30/1
6-36-1
6-53-5/1
6-36-33/1
6-38-7
6-35-3/2
36L
20L
6-35-1
6-56-12/1
6 53 6 1
6-10-14/1
6-58-12/1
6-38-B15/1

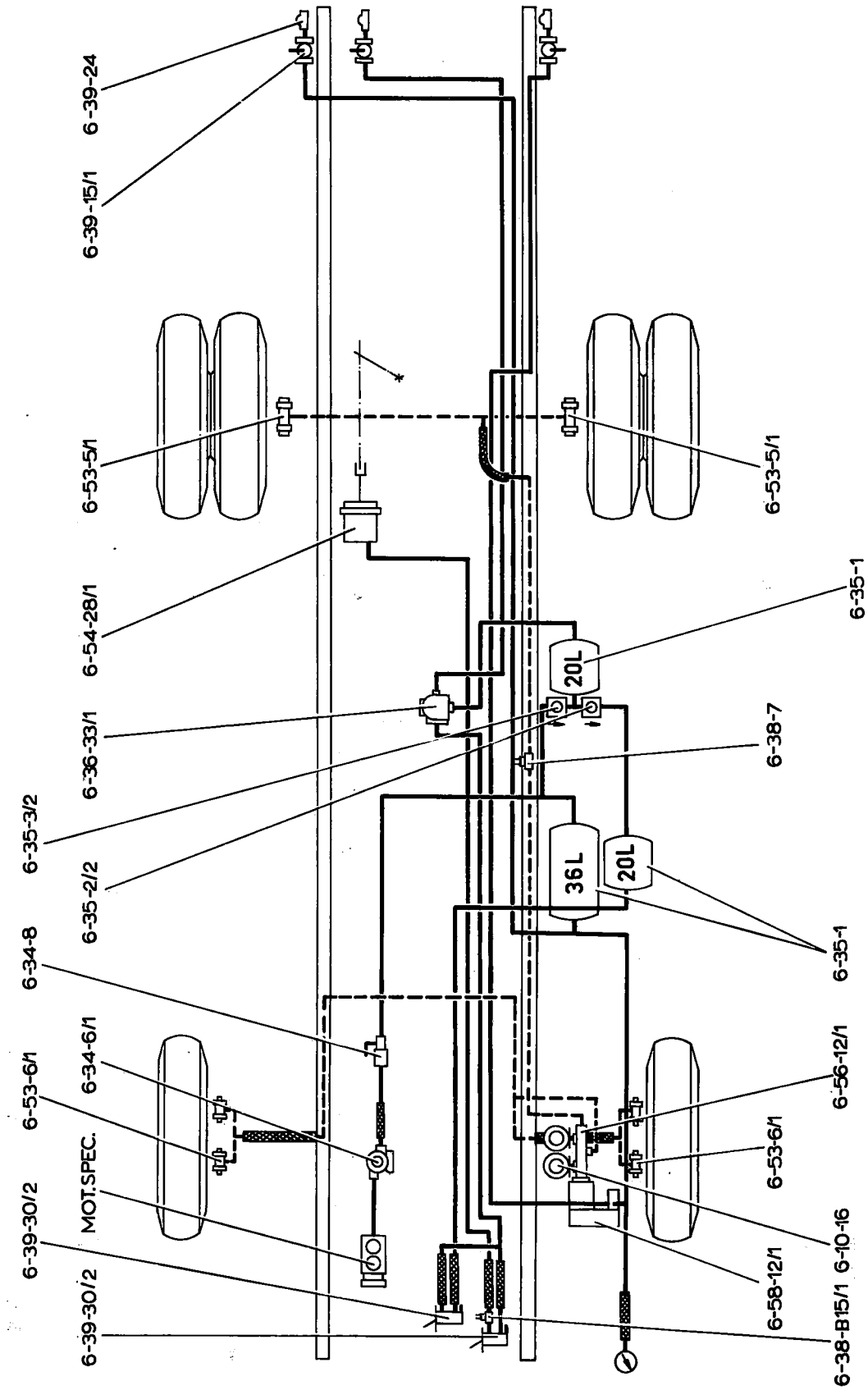
6-39-24
6-39-15/1
6-53-5/1
6-53-5/1
6-54-28/1
6-35-1
6-36-33/1
20L
6-38-7
6-35-3/2
6-35-2/2
36L
20L
6-35-1
6-34-8
6-34-6/1
6-53-6/1
6-56-12/1
6-53-6/1
MOT.SPEC.
6-39-30/2
6-10-16
6-58-12/1
6-39-30/2
6-38-B15/1

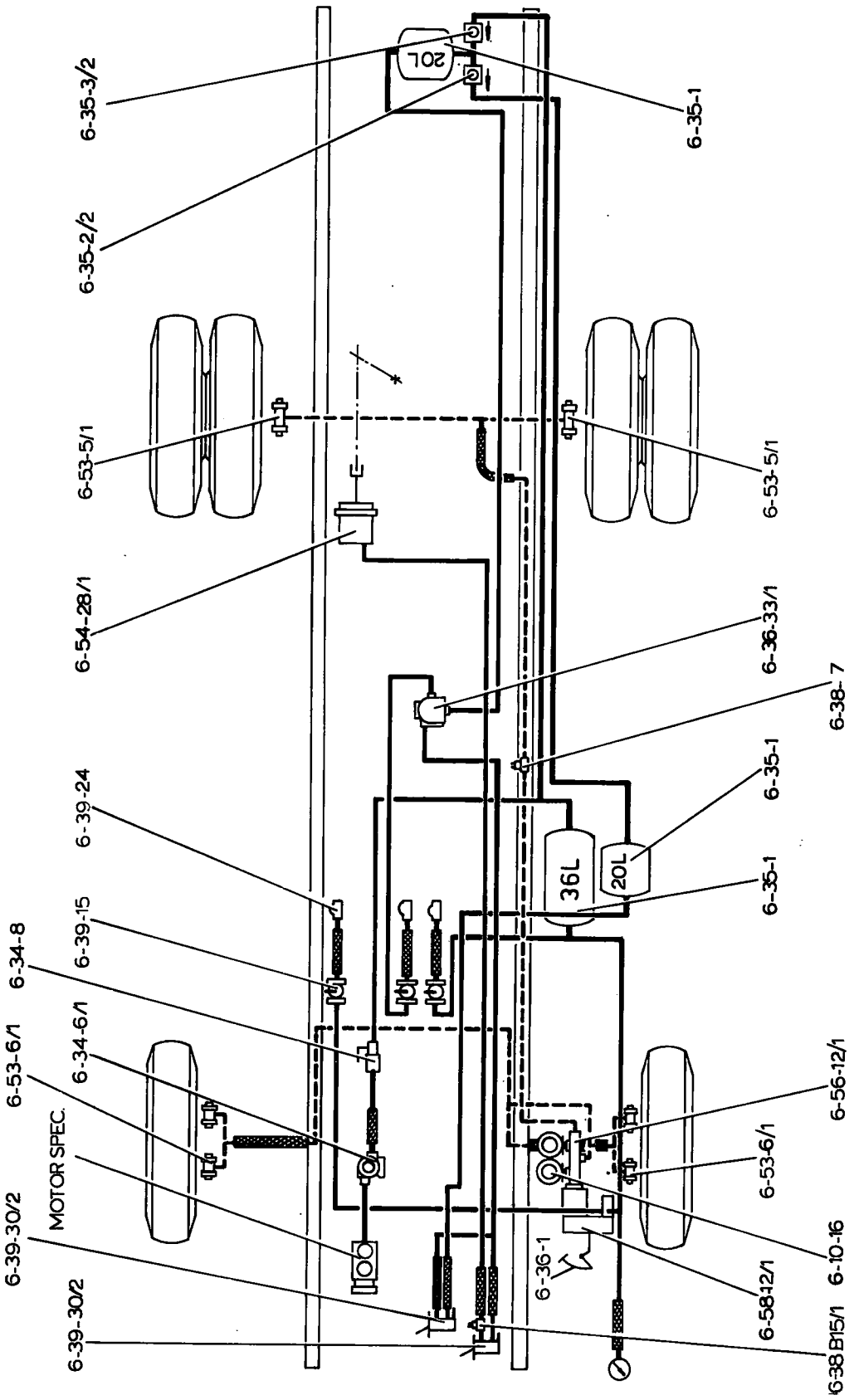
6-35-3/2
6-35-2/2
6-53-5/1
6-54-28/1
6-39-24
6-39-15
6-34-8
6-53-6/1
6-34-6/1
MOTOR SPEC.
6-39-30/2
6-39-30/2
20L
6-35-1
6-53-5/1
6-36-33/1
6-38-7
6-35-1
36L
20L
6-35-1
6-56-12/1
6-53-6/1
6-10-16
6-36-1
6-58-12/1
6-38B15/1

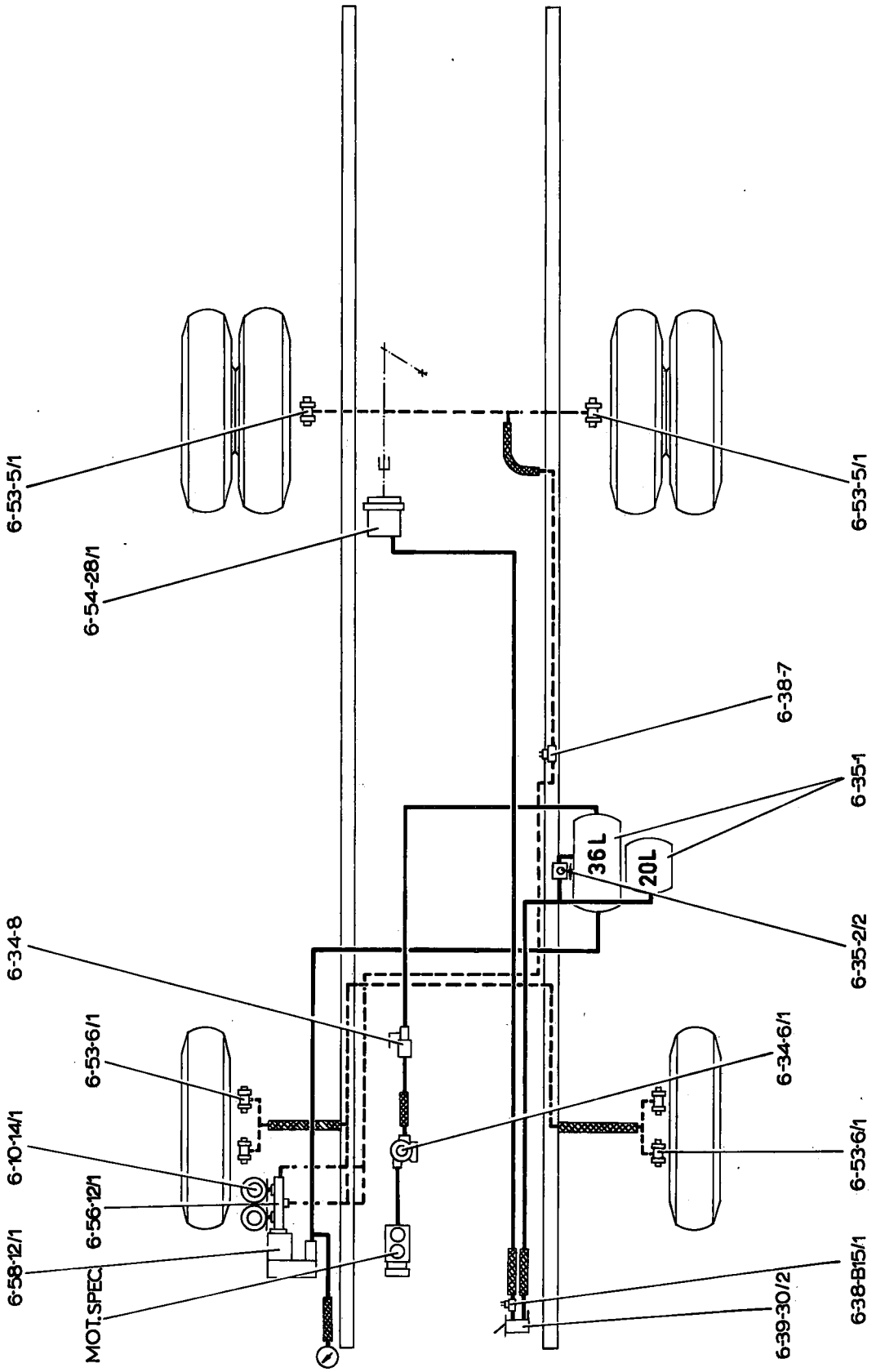
6-53-5/1
6-54-28/1
6-53-5/1
6-38-7
6-35-1
36 L
20L
6-35-2/2
6-34-8
6-53-6/1
6-34-6/1
6-10-14/1
6-53-6/1
6-56-12/1
6-58-12/1
MOT.SPEC.
6-38-B15/1
6-39-30/2

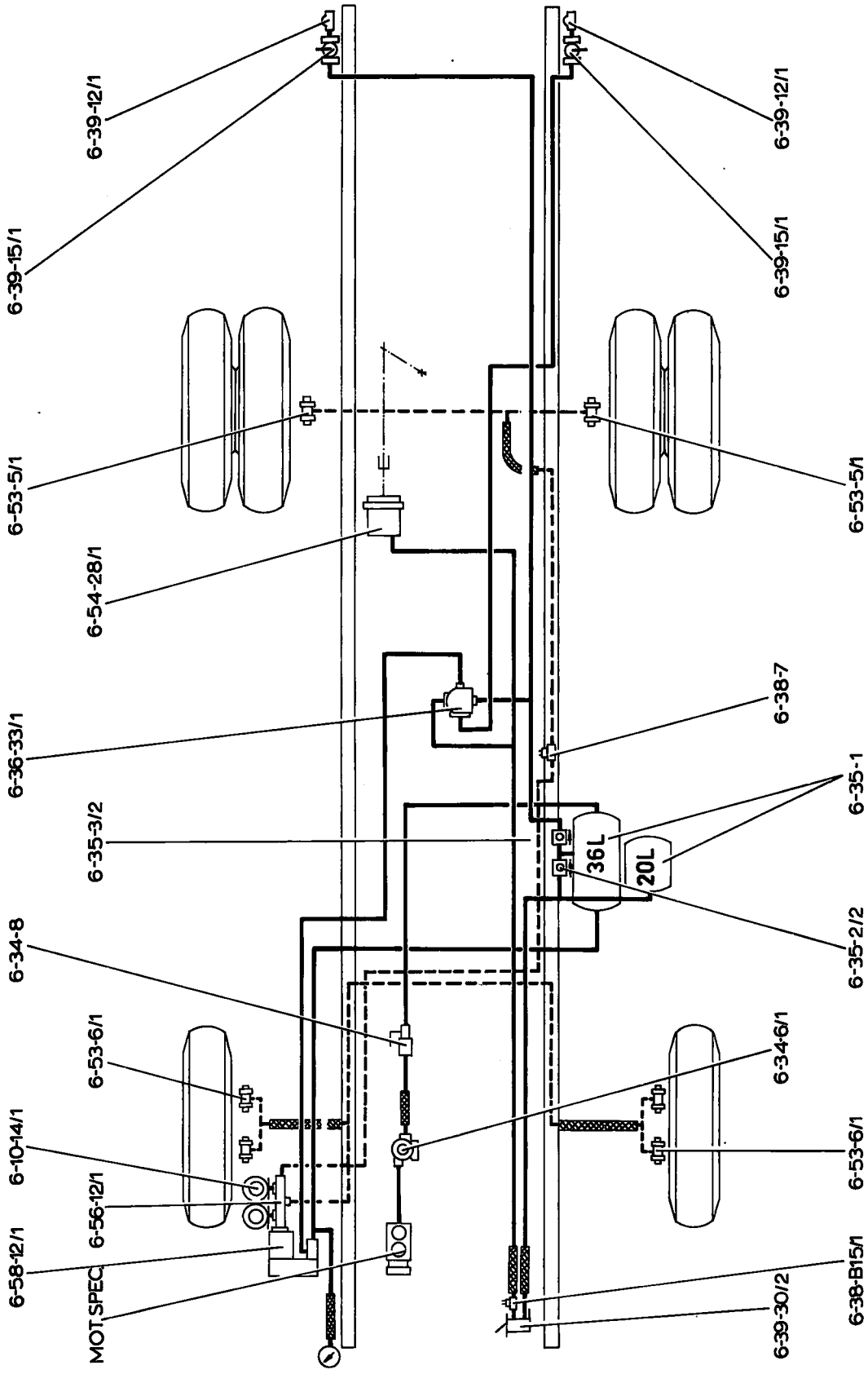
6-39-12/1
6-39-15/1
6-53-5/1
6-54-28/1
6-36-33/1
6-35-3/2
6-34-8
6-53-6/1
6-10-14/1
6-56-12/1
6-58-12/1
MOT SPEC
6-39-12/1
6-39-15/1
6-53-5/1
6-38-7
6-35-1
36L
20L
6-35-2/2
6-34-6/1
6-53-6/1
6-38-B15/1
6-39-30/2

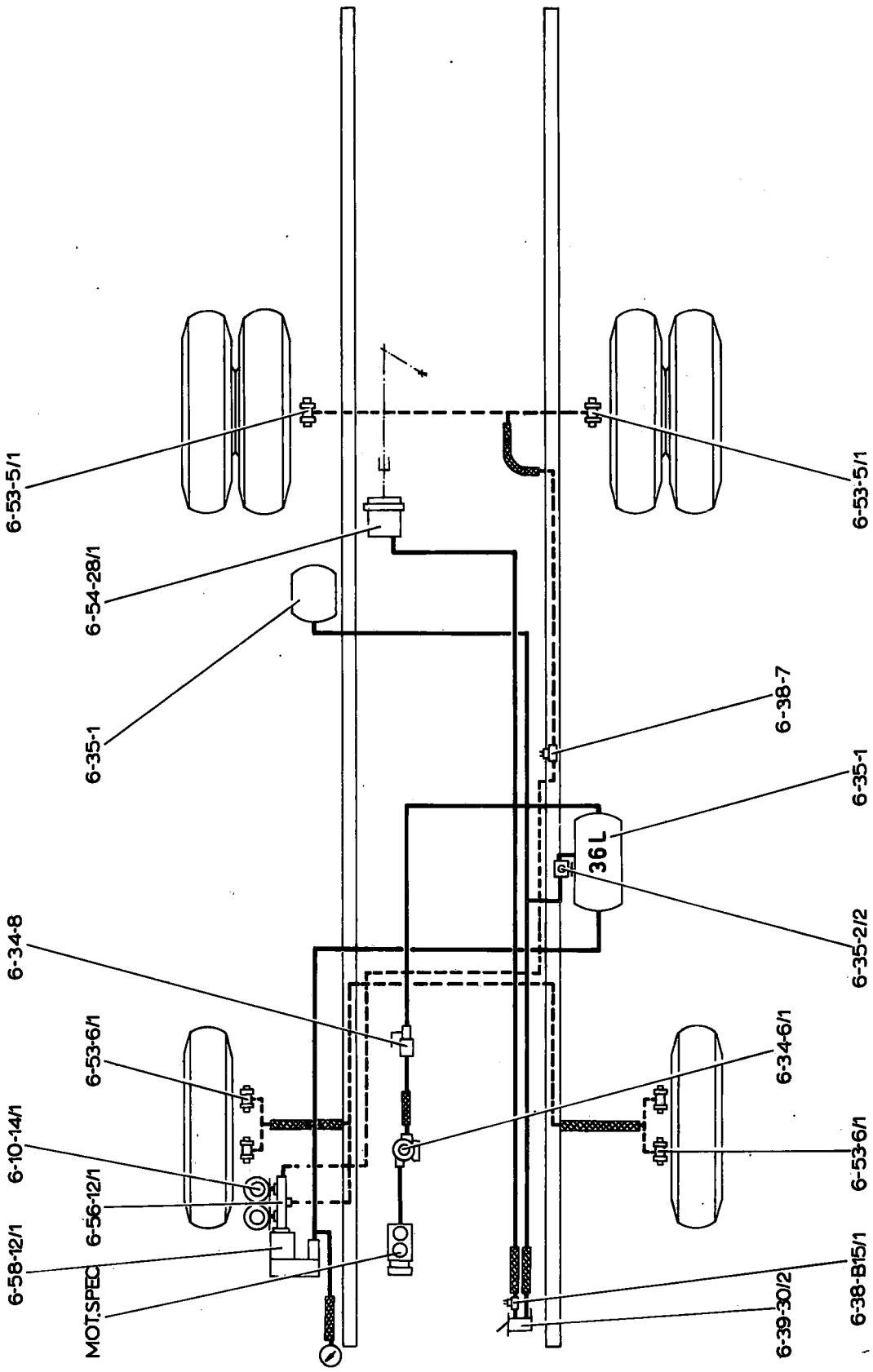
6-53-5/1
6-54-28/1
6-35-1
6-34-8
6-53-6/1
6-10-14/1
6-56-12/1
6-58-12/1
MOT.SPEC
6-53-5/1
6-38-7
6-35-1
36 L
6-35-2/2
6-34-6/1
6-53-6/1
6-38-B15/1
6-39-30/2

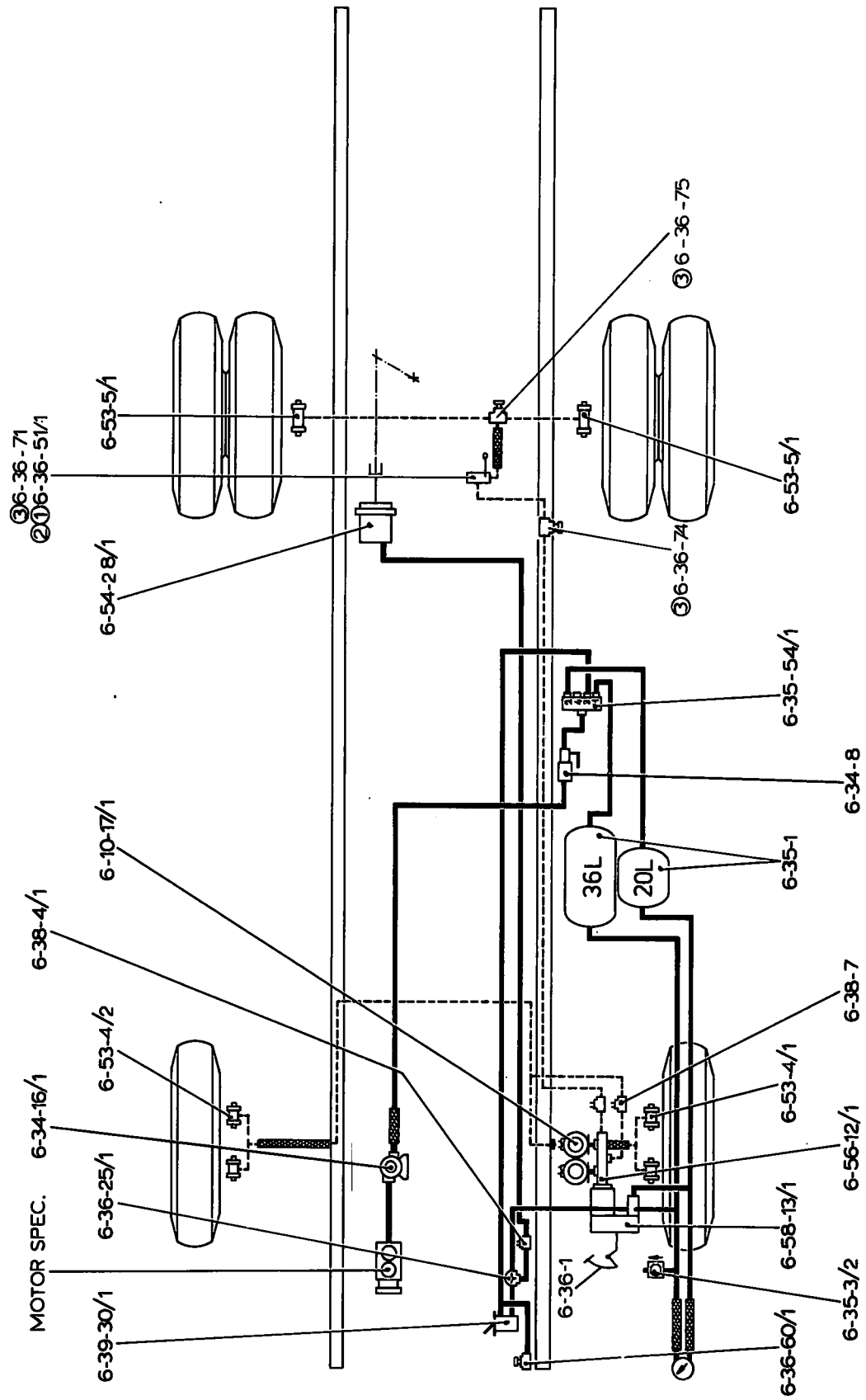
6-53-5/1
③6-36-71
②①6-36-51/1
6-54-28/1
③6-36-75
6-53-5/1
③6-36-74
6-35-54/1
6-34-8
6-10-17/1
36L
20L
6-35-1
6-38-4/1
6-38-7
6-53-4/2
6-53-4/1
6-34-16/1
6-56-12/1
6-36-25/1
6-58-13/1
MOTOR SPEC.
6-36-1
6-35-3/2
6-39-30/1
6-36-60/1

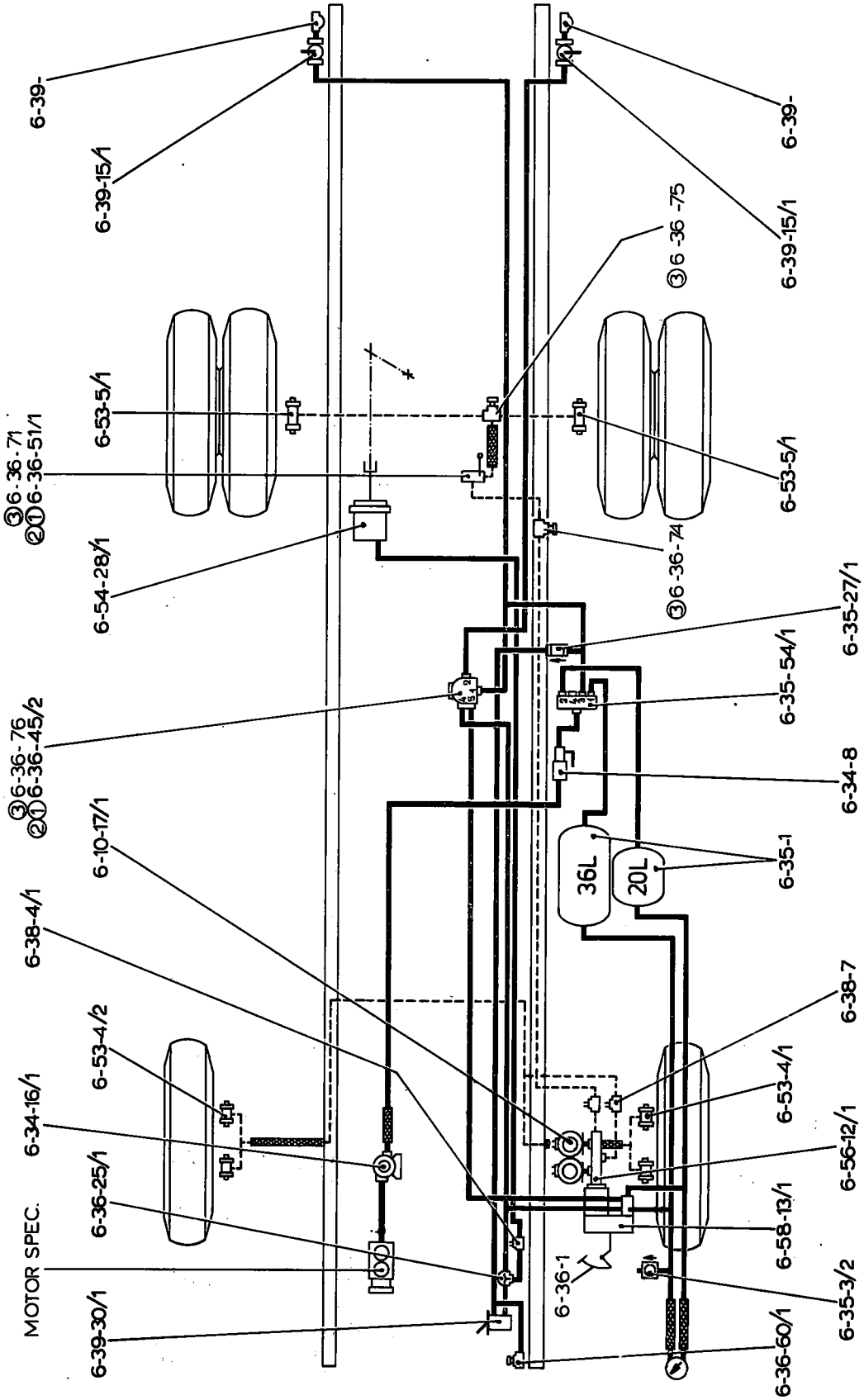
6-39-
6-39-15/1
6-53-5/1
③6-36-71
②①6-36-51/1
6-54-28/1
③6-36-76
②①6-36-45/2
6-10-17/1
6-38-4/1
6-53-4/2
6-34-16/1
6-36-25/1
MOTOR SPEC.
6-39-30/1
6-39-
6-39-15/1
③6-36-75
6-53-5/1
③6-36-74
6-35-27/1
6-35-54/1
6-34-8
36L
20L
6-35-1
6-38-7
6-53-4/1
6-56-12/1
6-58-13/1
6-36-1
6-35-3/2
6-36-60/1

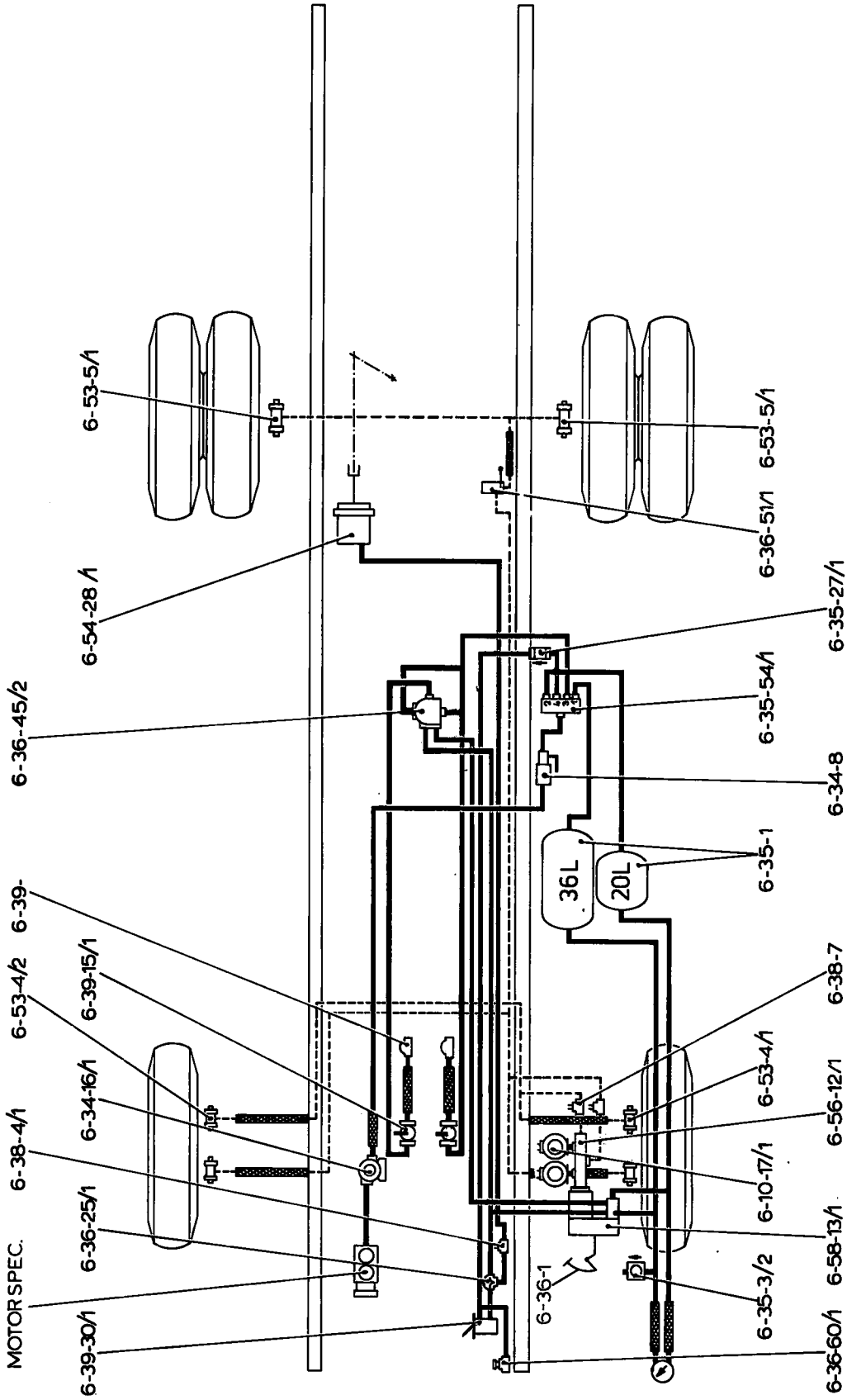
6-53-5/1
6-54-28/1
6-36-45/2
6-39-
6-53-4/2
6-39-15/1
6-34-16/1
6-38-4/1
6-36-25/1
MOTOR SPEC.
6-39-30/1
6-53-5/1
6-36-51/1
6-35-27/1
6-35-54/1
6-34-8
6-35-1
36L
20L
6-38-7
6-53-4/1
6-56-12/1
6-10-17/1
6-58-13/1
6-36-1
6-35-3/2
6-36-60/1

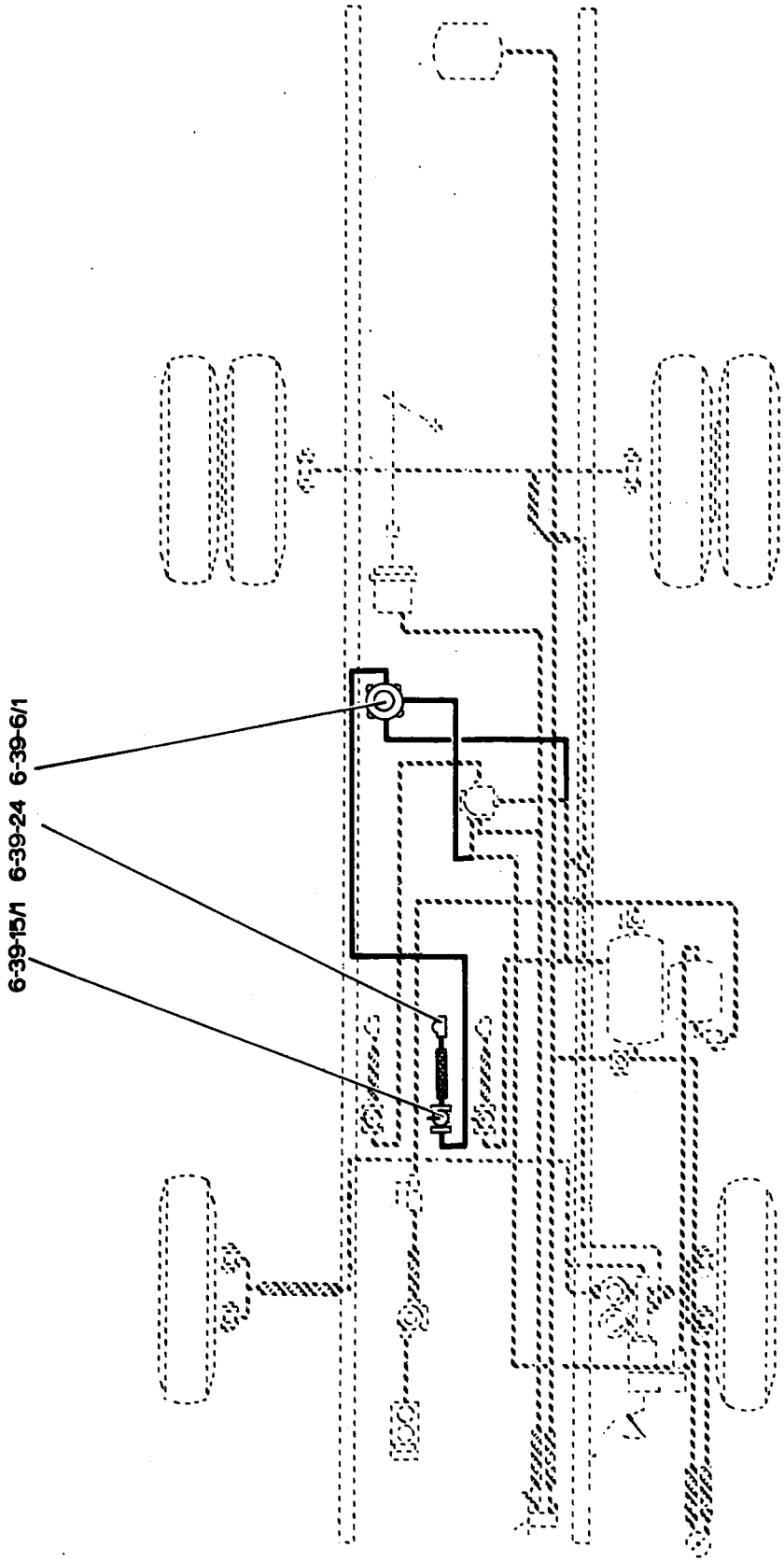
6-39-6/1
6-39-24
6-39-15/1

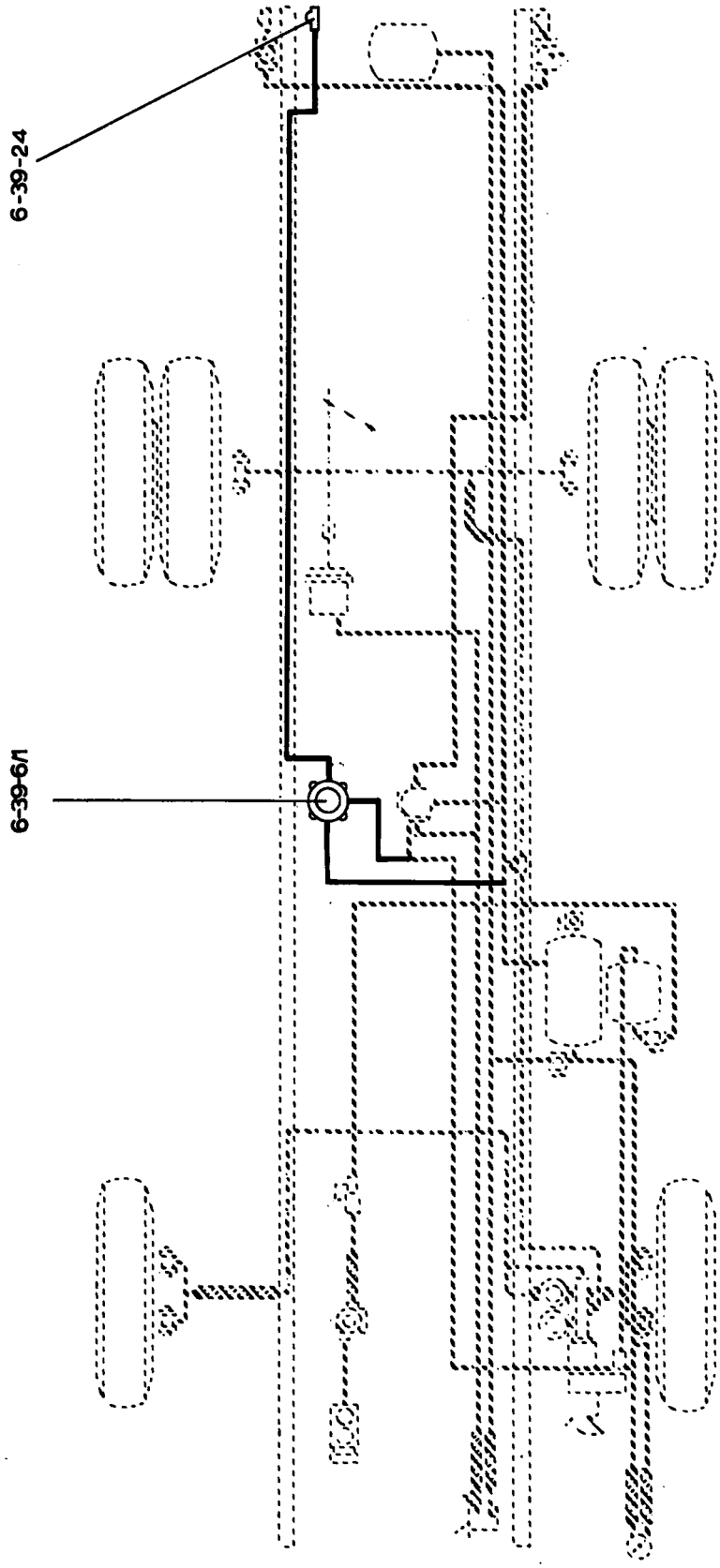
6-39-24
6-39-6/1

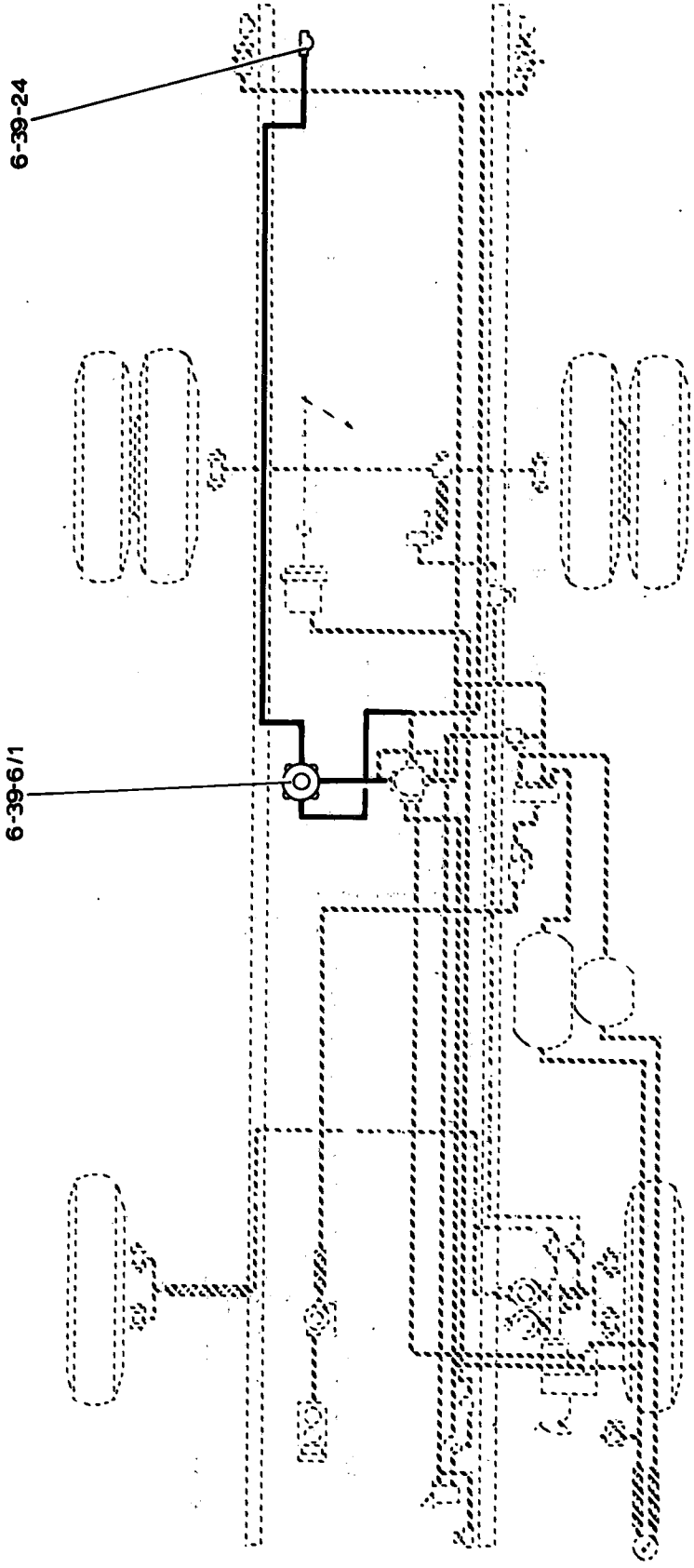
6-39-24
6-39-6/1

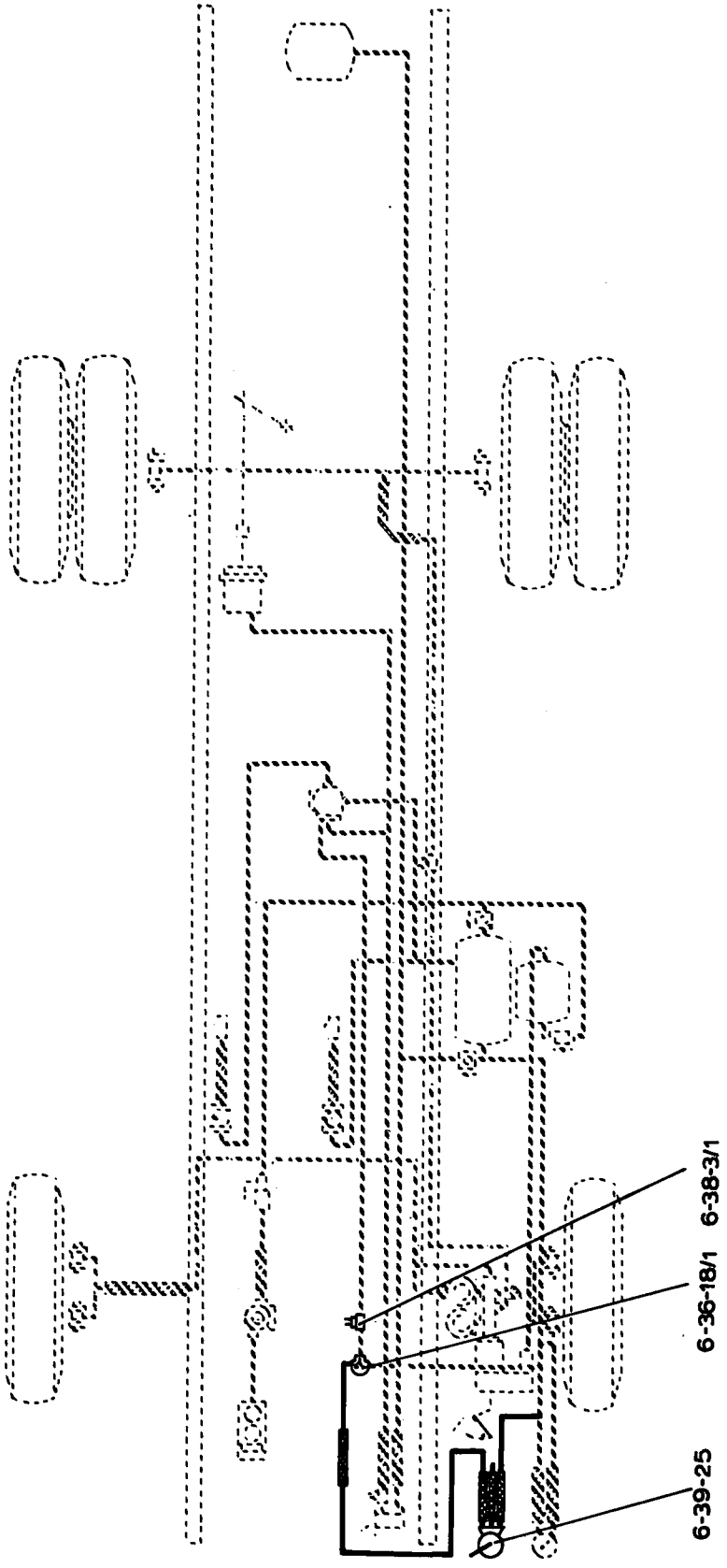
6-38-3/1
6-36-18/1
6-39-25

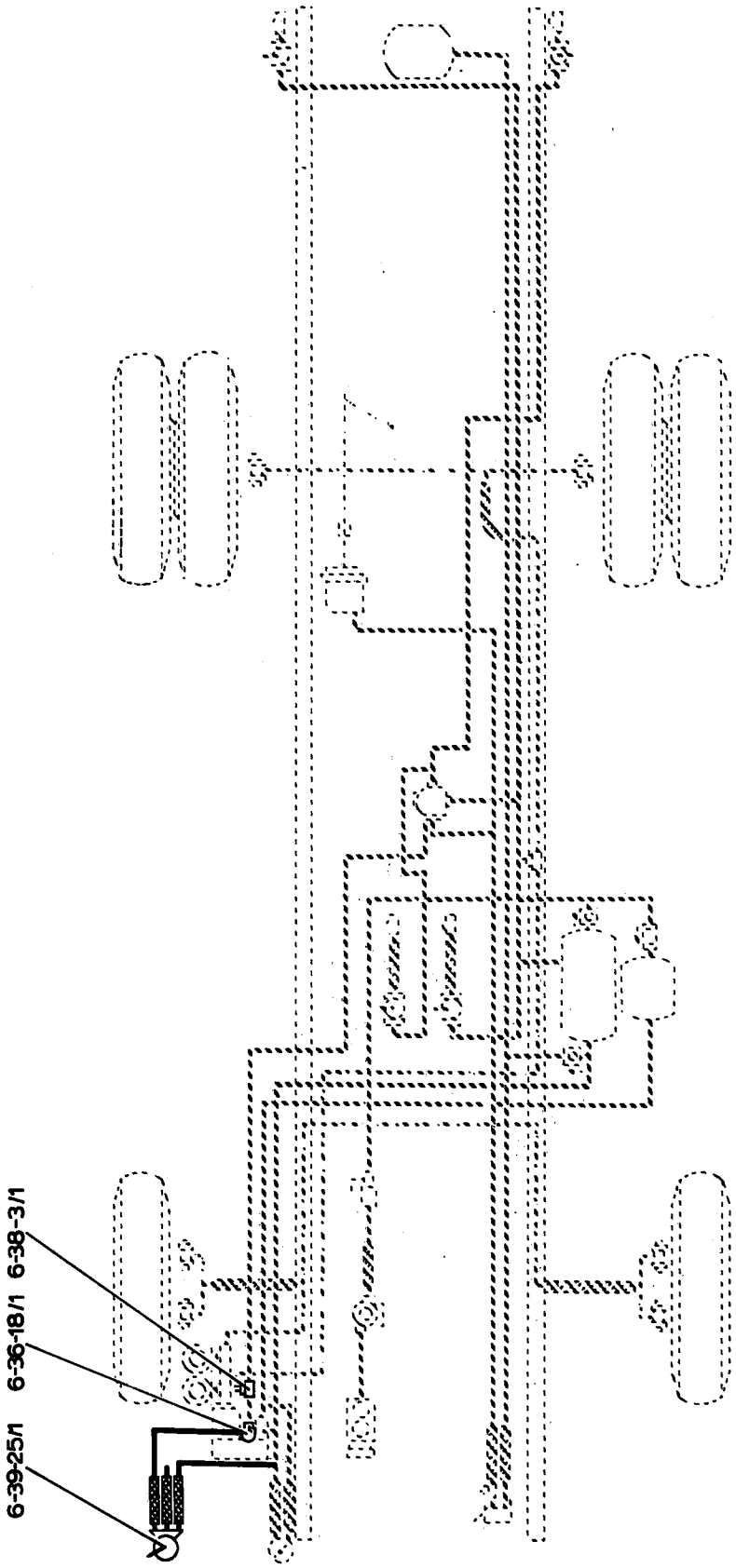
6-39-25/1
6-36-18/1
6-38-3/1

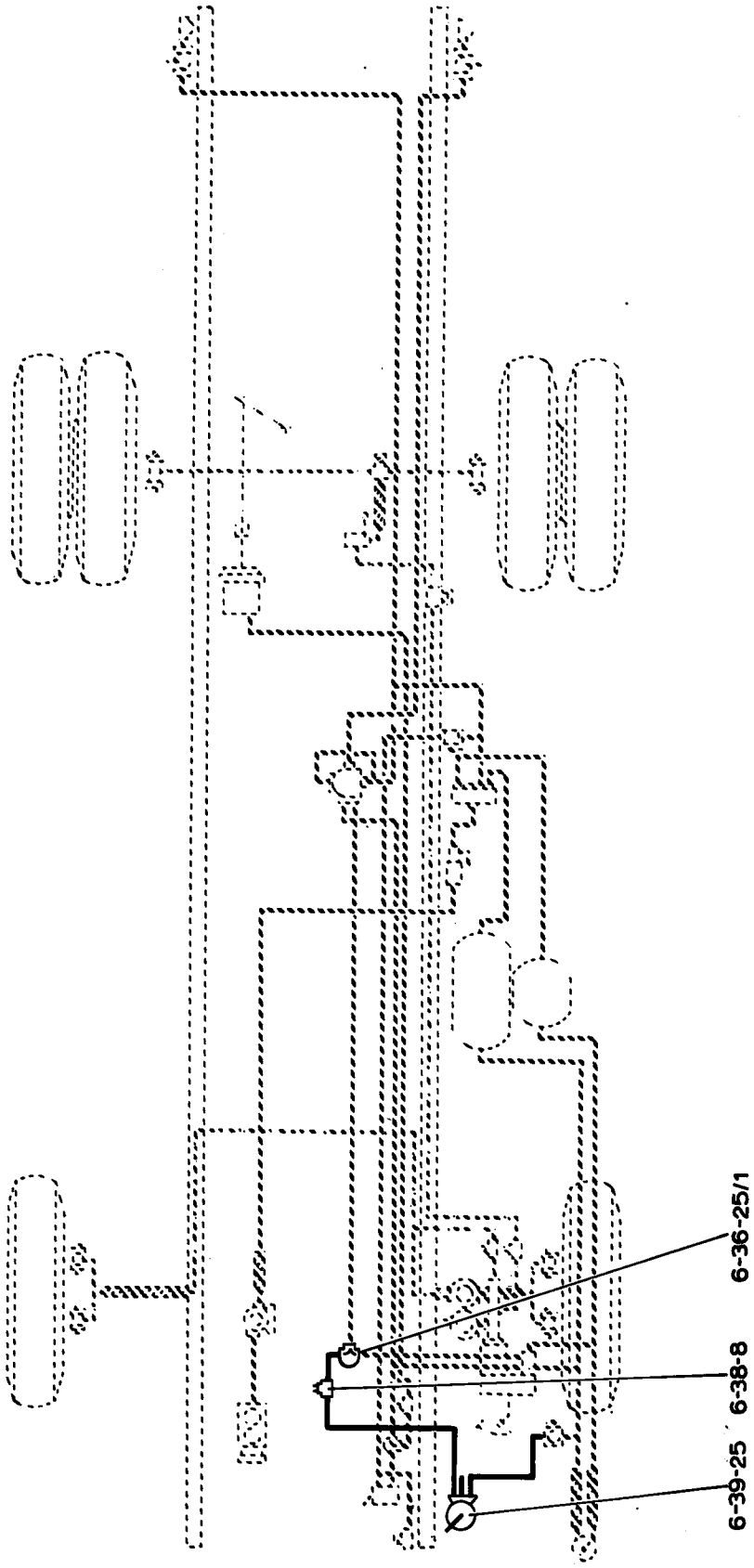
6-36-25/1
6-38-8
6-39-25

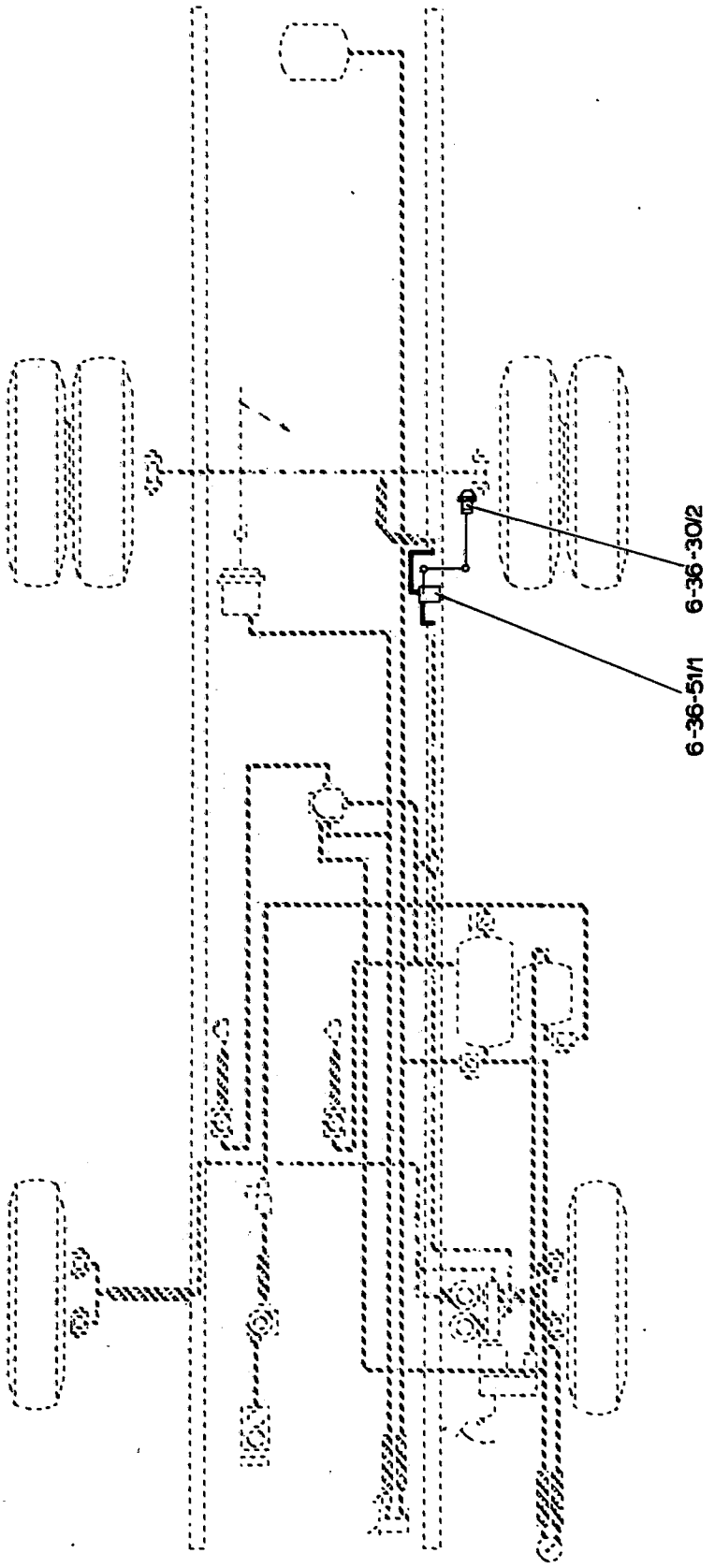
6-36-30/2
6-36-51/1